ITEM NO.	PART NUMBER	DESCRIPTION	QTY.
1	117.01.01.02	Posh Solus 820x820 Rear Outlet	1

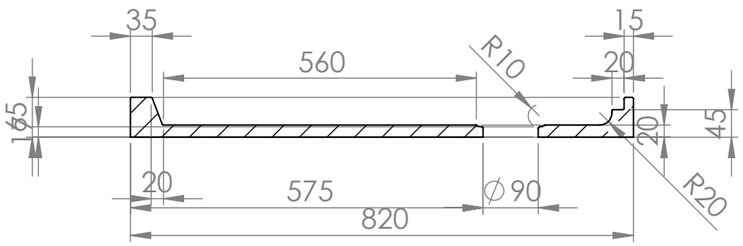

SECTION A-A

CROSS SECTION VIEW

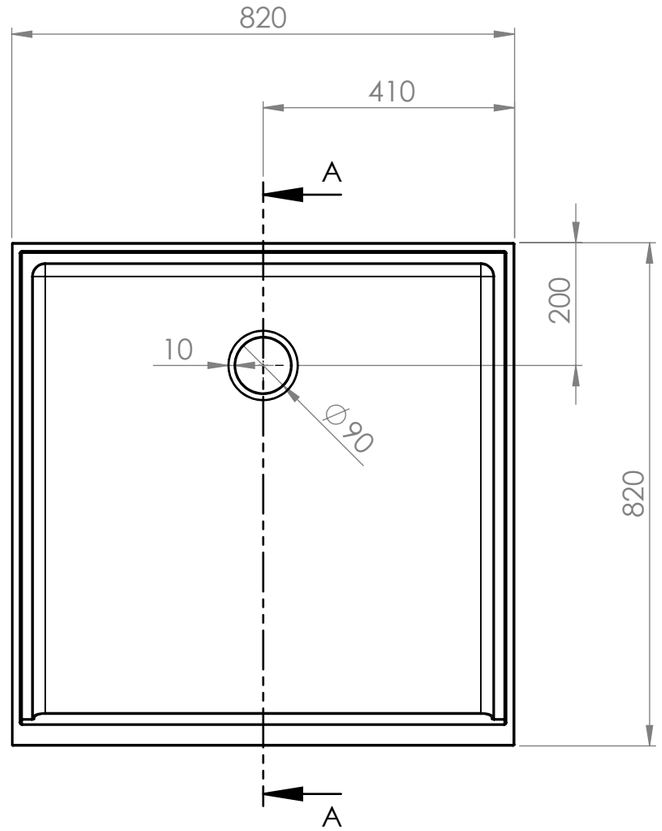

TOP VIEW

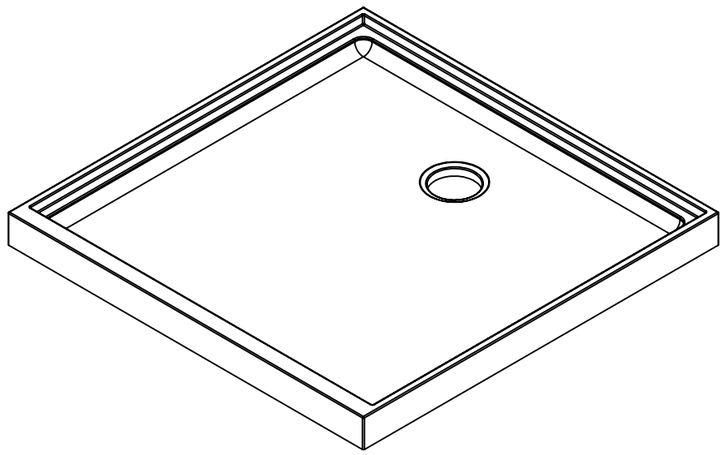

ISOMETRIC VIEW

Showerline
5 Kim Court
North Geelong VIC 3215

Phone: 1800 688 745
Fax: n/a
Email: n/a
Website: www.showerline.com.au

Material:
Poly Marble

Part Number:
117.01.01.02

UNLESS OTHERWISE SPECIFIED:
DIMENSIONS ARE IN MILLIMETERS
SURFACE FINISH: Gel coat, Fast cure ISO NPG Styrene Monomer
TOLERANCES: 5mm
ALL FILLETS 2mm UNLESS SPECIFIED

Drawn and prepared by

NAME	SIGNATURE	DATE
Jason Duong		08/09/2017

DO NOT SCALE DRAWING

REVISION 1.1

TITLE:

Posh Solus 820x820 Rear Outlet DRAWING rev1.1

SIZE A

DWG NO. 37 of 50

A3

PAGE: 1

SCALE:1:10
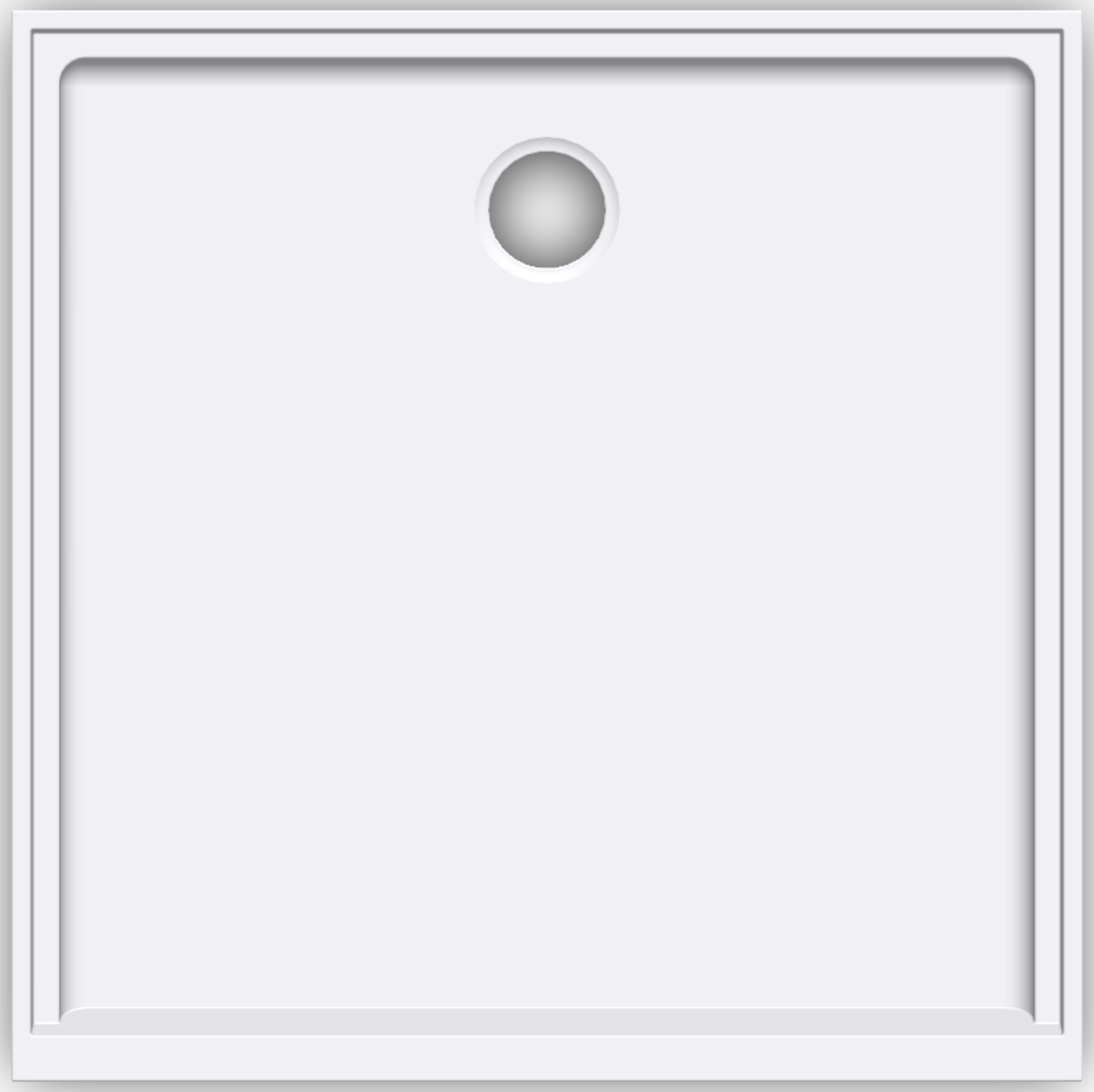
This drawing and design belongs to Showerline. This technical drawing is a guide only, dimensions should be checked with actual shower base supplied.